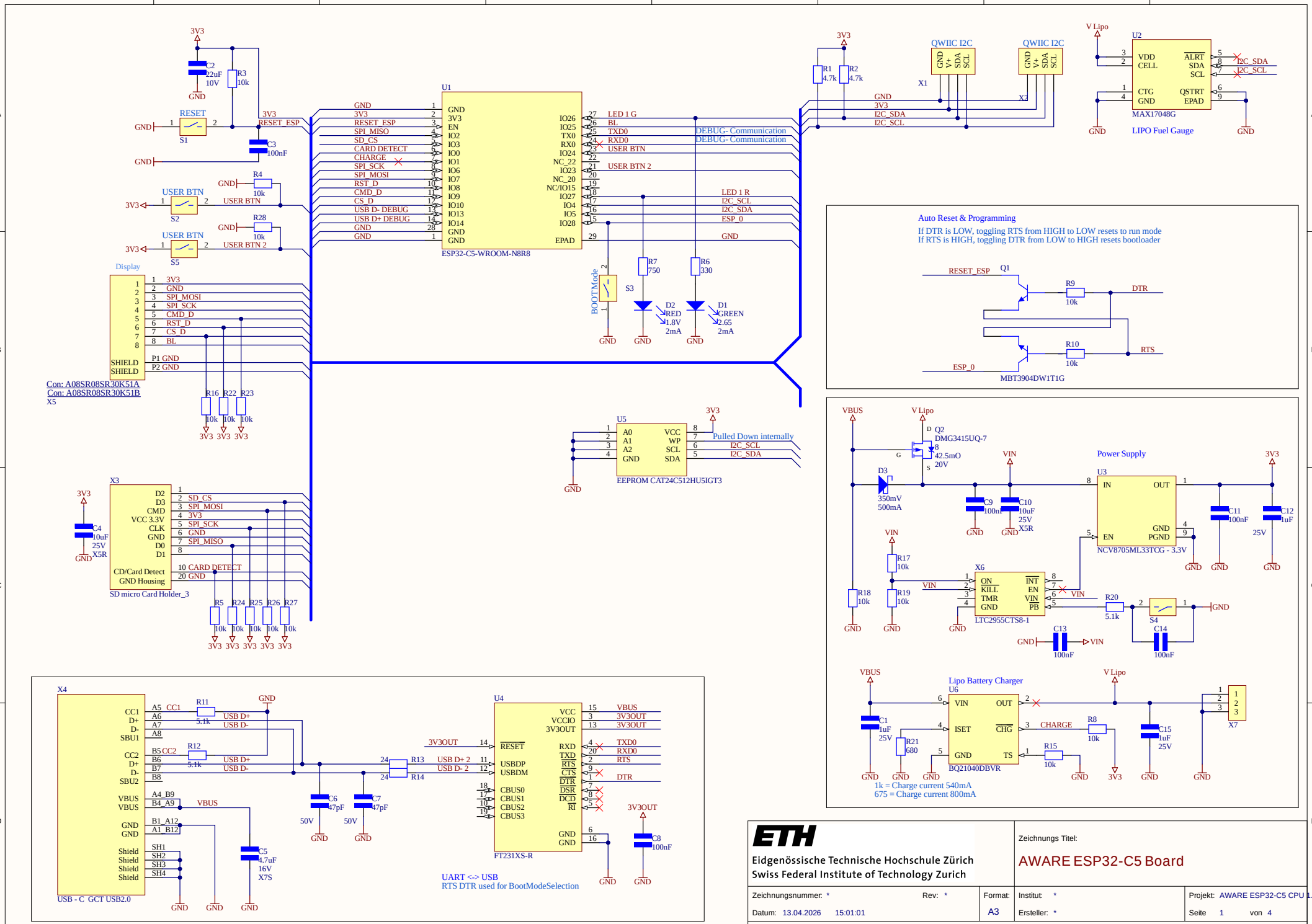
U1
ESP32-C5-WROOM-N8R8
GND
3V3
EN
IO2
IO3
IO0
IO1
IO6
IO7
IO8
IO9
IO10
IO13
IO14
GND
GND
IO26
IO25
TX0
RX0
IO24
NC_22
IO23
NC_20
NC/IO15
IO27
IO4
IO5
IO28
EPAD
RESET_ESP
SPI_MISO
SD_CS
CARD DETECT
CHARGE
SPI_SCK
SPI_MOSI
RST_D
CMD_D
CS_D
USB D- DEBUG
USB D+ DEBUG
LED 1 G
BL
TXD0
RXD0
USER BTN
USER BTN 2
LED 1 R
I2C_SCL
I2C_SDA
ESP_0
DEBUG- Communication
DEBUG- Communication
C2 22uF 10V
R3 10k
C3 100nF
RESET S1
USER BTN S2
USER BTN S5
R4 10k
R28 10k
BOOTMode S3
R7 750
R6 330
D2 RED 1.8V 2mA
D1 GREEN 2.65 2mA
Display
Con: A08SR08SR30K51A
Con: A08SR08SR30K51B
X5
SHIELD
P1 GND
P2 GND
R16 R22 R23 10k
X3
SD micro Card Holder_3
D2
D3
CMD
VCC 3.3V
CLK
GND
D0
D1
CD/Card Detect
GND Housing
SD_CS
SPI_MOSI
SPI_SCK
SPI_MISO
CARD DETECT
C4 10uF 25V X5R
R5 R24 R25 R26 R27 10k
U5
EEPROM CAT24C512HU5IGT3
A0
A1
A2
VCC
WP
SCL
SDA
Pulled Down internally
R1 4.7k
R2 4.7k
QWIIC I2C
X1
X2
U2
MAX17048G
LIPO Fuel Gauge
V Lipo
VDD
CELL
CTG
ALRT
QSTRT
EPAD
I2C_SDA
I2C_SCL
Auto Reset & Programming
If DTR is LOW, toggling RTS from HIGH to LOW resets to run mode
If RTS is HIGH, toggling DTR from LOW to HIGH resets bootloader
Q1
MBT3904DW1T1G
R9 10k
R10 10k
DTR
RTS
Power Supply
U3
NCV8705ML33TCG - 3.3V
IN
OUT
EN
GND
PGND
Q2 DMG3415UQ-7
42.5mO 20V
D3 350mV 500mA
C9 100nF
C10 10uF 25V X5R
C11 100nF
C12 1uF 25V
X6
LTC2955CTS8-1
ON
KILL
TMR
INT
EN
VIN
PB
R17 10k
R18 10k
R19 10k
R20 5.1k
S4
C13 100nF
C14 100nF
Lipo Battery Charger
U6
BQ21040DBVR
VIN
OUT
ISET
CHG
TS
C1 1uF 25V
R21 680
R8 10k
R15 10k
C15 1uF 25V
X7
1k = Charge current 540mA
675 = Charge current 800mA
X4
USB - C GCT USB2.0
CC1
D+
D-
SBU1
CC2
SBU2
VBUS
Shield
A5 CC1
A6 USB D+
A7 USB D-
A8
B5 CC2
B6 USB D+
B7 USB D-
B8
A4_B9
B4_A9
B1_A12
A1_B12
SH1
SH2
SH3
SH4
R11 5.1k
R12 5.1k
R13
R14
C6 47pF 50V
C7 47pF 50V
C5 4.7uF 16V X7S
U4
FT231XS-R
RESET
USBDP
USBDM
CBUS0
CBUS1
CBUS2
CBUS3
VCC
VCCIO
3V3OUT
RXD
TXD
RTS
CTS
DTR
DSR
DCD
RI
USB D+ 2
USB D- 2
C8 100nF
UART <-> USB
RTS DTR used for BootModeSelection
ETH
Eidgenössische Technische Hochschule Zürich
Swiss Federal Institute of Technology Zurich
Zeichnungs Titel:
AWARE ESP32-C5 Board
Zeichnungsnummer: *
Rev: *
Format: A3
Institut: *
Ersteller: *
Projekt: AWARE ESP32-C5 CPU 1.0.SchDoc
Datum: 13.04.2026 15:01:01
Seite 1 von 4
File: C:\Users\alexa\Documents\PROJECTS\155 AWARE\ECAD\AWARE ESP32-C5 1.0\AWARE ESP32-C5 CPU 1.0.SchDoc